triwave picogenerator enlarged layout (soldering side) www.commonsound.com

2002 April 15

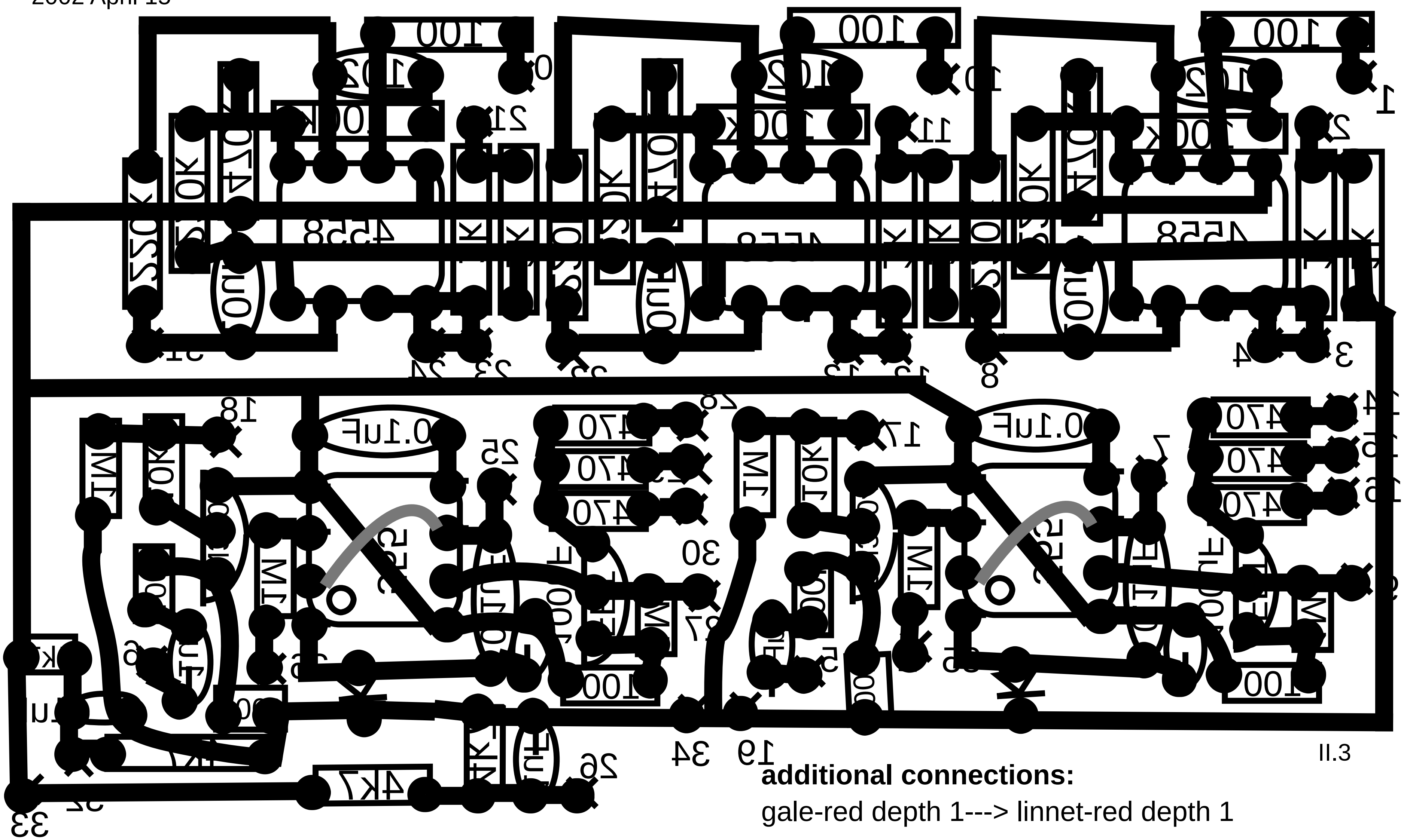

additional connections:

gale-red depth 1---> linnet-red depth 1

gale-yellow depth 1--> linnet-yellow depth 1

gale-green depth 1---> linnet-green depth 1

gale-red depth 3---> gl-yelo depth 3---> gl-grn depth 3

linnet-red depth 3---> lin-yelo dpt 3---> lin-grn depth 3

linnet tone 1-->linnet pitch 1

gale tone 1-->gale pitch 1

controls:

mix 500k linear
volume 100k audio (or linear)
red speed 500k audio
yel speed 500k audio
grn speed 500k audio

Gale tone is a SPDT switch
Linnet tone is a SPDT switch
linnet pitch 100k audio
gale pitch 100k audio
depths (there's 6) 100k audio

"audio" refers to audio taper, which is aka log taper. "linear" means linear or standard taper.

green@commonsound.com for errors, suggestions, etc.
by dann green

Non-commercial use only
(except with written permission).